Instructions for use

Thank you for your purchase of the ERGOREST forearm supports.
ERGOREST forearm rests are ergonomically designed to provide the user with support for forearms and relief from musde strain and tension in neck and shoulders. ERGOREST forearm rests are designed for office and industrial use, such as data-terminal and light factory assembling tasks.

CONSTRUCTION

Being lightweight but stable, the rests give easy movability. Arm and attachment unit made of aluminium alloy and plastic parts of polyamid. Pads of foamy plastic, real leather upholstery.

INSTALLATION AND ADJUSTING

(Picture 1A & 1B)

- Adjustable fastening unit

Mount the ERGOREST forearm support to a worktop from 15 to 43 mm or 5/8 - 1 5/8 inches. In case of thicker tops, please use arms with a larger fastening upper part. The worktop being 34-64 mm or 1 1/4 - 2 1/2 in. The larger upper jaw part is available as an optional part. Adjust the opening by loosening the screw A and tighten carefully when the opening is right.

Tighten the forearm rest to the worktop with screw B.

- Height adjustment (Picture 1A, 1B and 1C)

The height of the rest is adjusted to the correct working height by screw 1C. The adjustment allowance for the version in picture 1A is 75 mm. To lift the rest, turn the screw clockwise. To lower the rest, turn it in the opposite direction.
The rest in picture 1B is equipped with a mouse station. Place the base of the mouse station above the fastening pin of the table and press gently to lock into position. The mouse station turns on its axis in various angles and provides an opportunity to use the mouse even outside the table.

Removable pads (Picture 1A & 1B)

The pads are fastened with tacks and can be removed by pulling the edge up with fingers. With longer pads, please use for ex. a screwdriver carefully. Refasten by pressing the pads against the tacks (holes must match).

LIST OF PARTS (Picture 1A & 1B)

1. Upper fastening part
2. Lower fastening part
3. Joint
4. Upper arm piece
5. Lower arm piece
6. Outer arm
7. Locking bush
8. Support cup
9. & 10. Upholstery channel
11. Mouse pad
12. Mouse pad base

INSTALLATION (see picture 3)

Mount the ERGOREST forearm rests (2) to the front of your worktop 50-60 cm (20-24 inches) apart, depending on keyboard or worktop construction. Take any problems with the installation to your dealer.

CORRECT WORKING POSTURE

(see picture 3)
The best working posture is achieved when the height of the chair, the back of the chair, the footrest, and the height of the forearm rests are correctly adjusted to the height of the worktop. In a correct working posture the position of the head and neck is natural, the angle between the body, elbow and the knees is over 100 degrees. The back of the chair is reclined sufficiently, the front of the chair does not press the tights and the feet rest on a footrest. See the picture.
Start with adjusting the height of the desktop to your sitting posture. Adjust then the height of the forearm rests with the screw located beneath the arm. The rests should provide the forearms light support. Note! Do not adjust the forearm rests too high!

USE

Place your arm on the rest so that the forearm is balanced on the pad. That is how you can best take advantage of the support and movability offered by ERGOREST.

1C

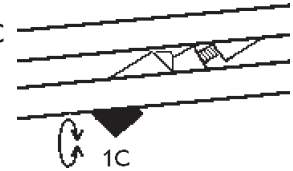

The forearm rest provides the user easy movability when the arm is placed on the rest. However, its movability is limited when not in use. This prevents the forearm rest from moving to the side when the arm is occasionally lifted from the pad.

NOTE

Use ERGOREST only for its intended use. Do not sit or lean on the rest. Excessive load may damage the forearm rest. Maximum load is 12 kgs pr 26 lbs and with the longer arm 10 kgs or 22 lbs.

MAINTENANCE AND CARE

ERGOREST forearm rest is maintenance free. Wipe the metal parts with a damp cloth. Keep water and moisture away from the joints.
Clean the pads with a mild soap and water solution.
Use alcohol solution to remove ink, lipstick and other stains. Have the pad replaced by your dealer when worn or damaged.

TECHNICAL FACTS

All models

- maximum operating span	
- basic model	235 mm/9 1/4 in
- with longer arm	275 mm/10 3/4 in
- Clamp openings	
- basic model	15-43 mm/ 5/8 - 1 5/8 in
- larger clamp	34-64 mm/ 1 1/4 - 2 1/2 in
- Adjustable heigh of arm	75 mm / 3 in
- Maximum load	
- basic model	12 kgs / 26 lbs
- longer outer arm	10 kgs / 22 lbs

WARRANTY

The manufacturer quarantees a new ERGOREST forearm rest for a period of two (2) years from the day of purchase.
The quarantee covers any part of this ERGOREST forearm rest. The quarantee does not cover damages caused by incorrect use or normal wear.

Use the forearm support only for the purposes mentioned above and observe the instructions. All kinds of other uses are the responsibility of the user.

1A

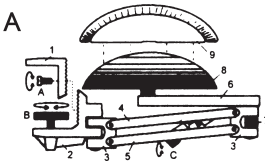

1B

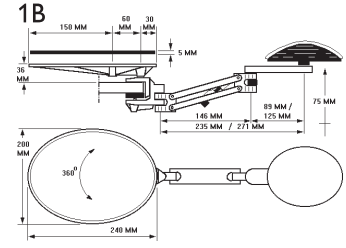

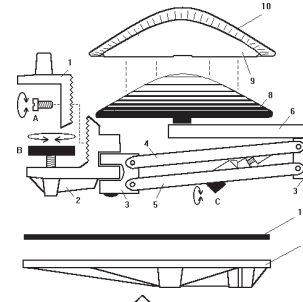

2

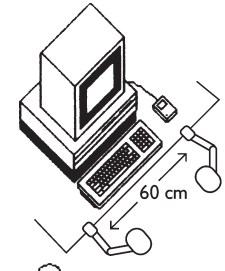
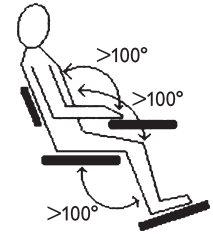
3