Powerdot

ERGO-SL013

ergowerken
overal lekker werken

CONTENT:

x1

x1

x1

A DRILL

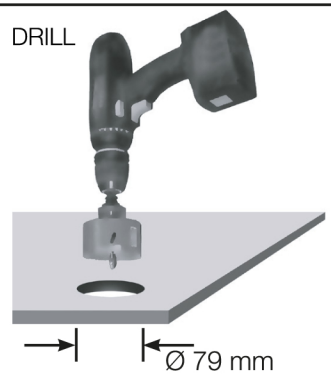

B INSERT

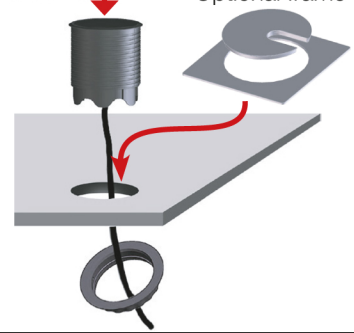

C TURN CLOCKWISE & PLUG IN

Turn the plastic fastening nut as far up the thread as possible. Make sure that it has been thoroughly tightened. Lastly, plug the Schuko plug into the wall socket.

1 CONNECT

Connect plug to Powerdot

2 RELEASE

Rotate counter clockwise

3 ADJUST

The inner part should now be loose. Adjust to desired level (see next step).

- 1 USB port
- 1 HDMI port
- 1 Schuko socket
- 1.5 meter cable

4 ADJUST LEVELS

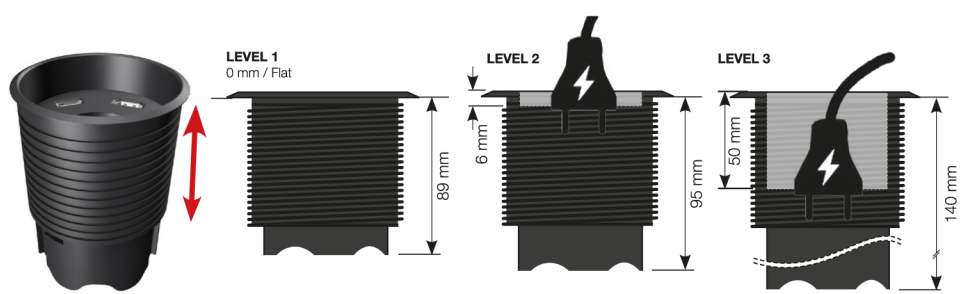

5a LOCK Level 1 & 2

Rotate clockwise

5b LOCK Level 3

Rotate

Patent pending PCT, China, EP

Ergowerken - Laagsteen 9, 4815 PH Breda - 076 2600 207 - klantenservice@ergowerken.nl